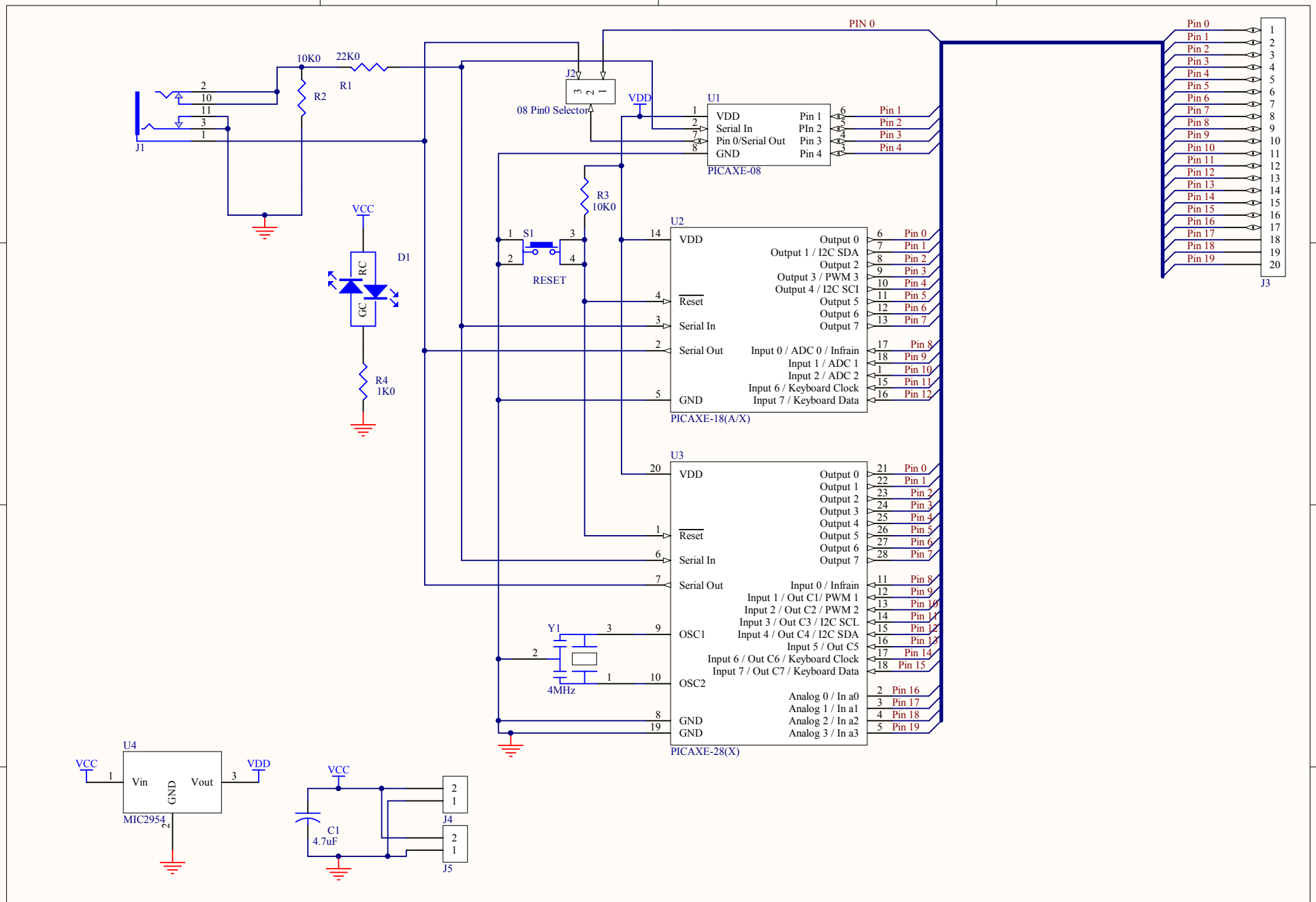

Solarbotics Ltd.
3740D - 11A St. NE
Calgary
Alberta, Canada
T2E 6M6

Title	AXE Stack Schematic	
Size Letter	Number	Revision
Date: 1/15/2013		Sheet of
File: \\..\PICAxe.SchDoc		Drawn By: