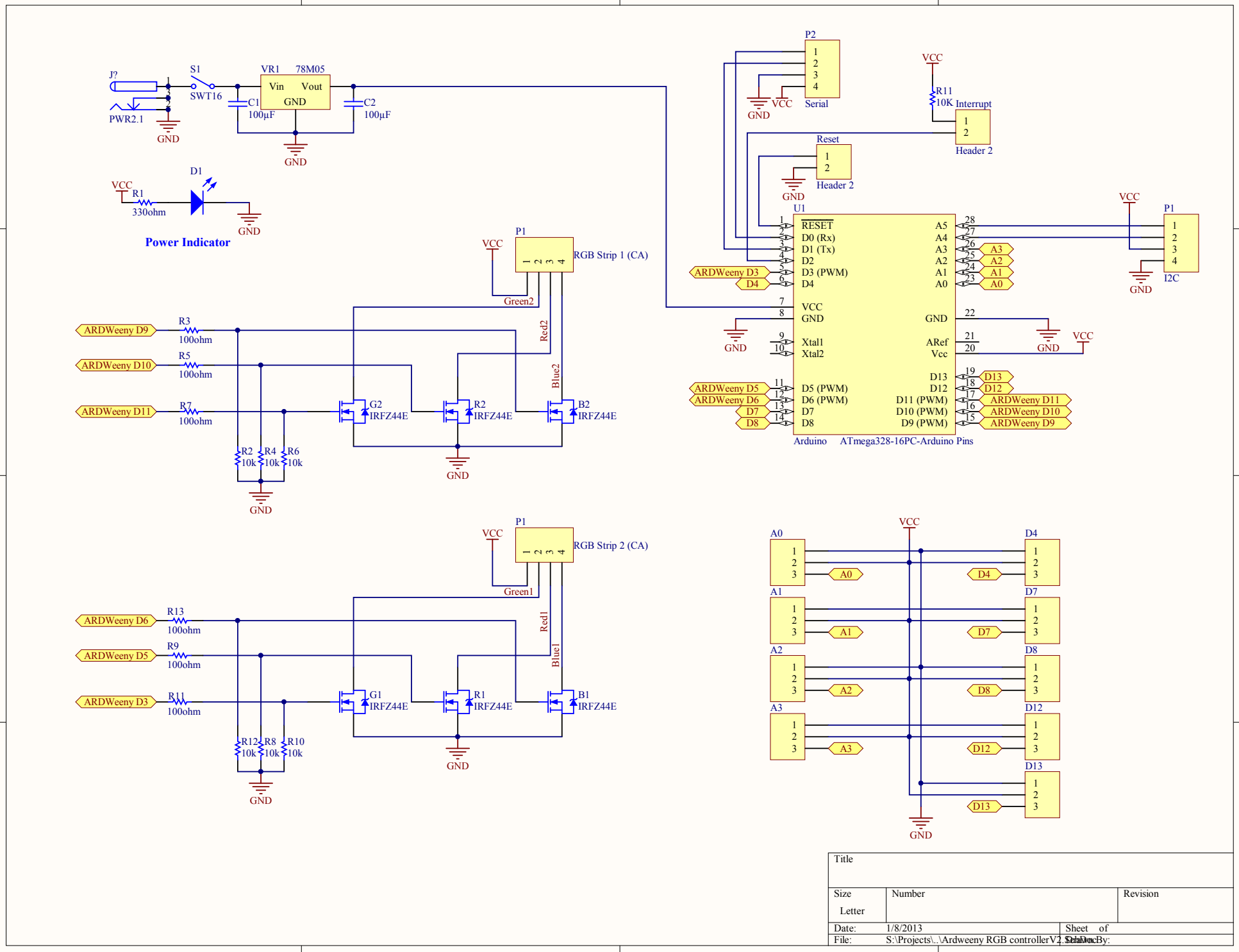

Title		
Size Letter	Number	Revision
Date: 1/8/2013	Sheet of	
File: S:\Projects\..\Ardweeny RGB controllerV2.SchDoc	Drawn By:	